Make: OPEL

Model: INSIGNIA B Sports Tourer

Part Number: ADB32371

Vehicle Manufacturing/Engine:

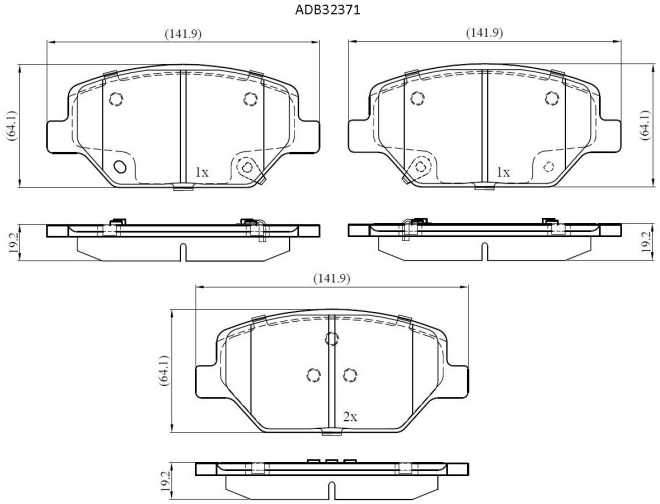

Specifications

Fitting Position	:	Front
Model Date	:	3/2017 >
Or. Caliper	:	

WVA	:	22,83,82,28,39,22,840
FMSI	:	
Length	:	141.9
Width	:	64.1
Thickness	:	19.2