Make: OPEL

Model: Insignia Saloon

Part Number: ADB31679

Vehicle Manufacturing/Engine:

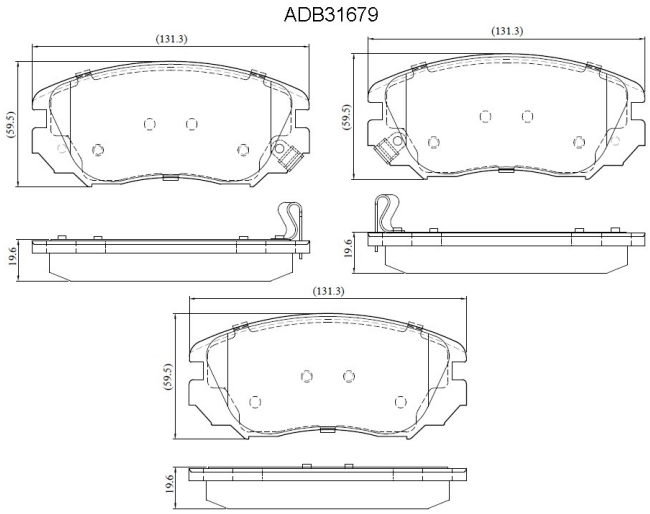

Specifications

Fitting Position	:	Front
Model Date	:	07/08-->
Or. Caliper	:	Mondo

WVA	:	24,41,52,44,16,24,417
FMSI	:	
Length	:	131.5
Width	:	59.5
Thickness	:	19.0/19.6