Make: OPEL

Model: Vectra A (10/91-95)

Part Number: ADB01007

Vehicle Manufacturing/Engine:

ADB01007

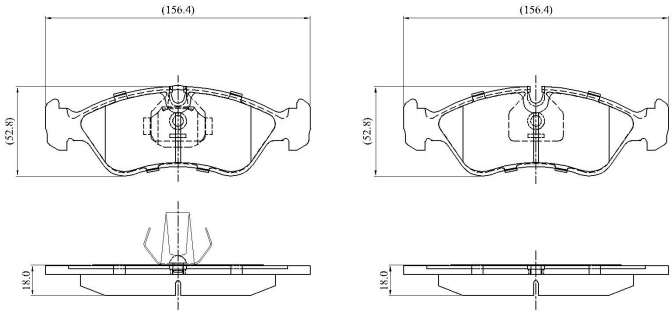

Specifications

Fitting Position	:	Front
Model Date	:	08/94-10/95
Or. Caliper	:	Ate
WVA	:	21862
FMSI	:	

Length	:	156.4
Width	:	52.8
Thickness	:	18