Make: OPEL

Model: Vectra A (10/95-11/01)

Part Number: ADB0741

Vehicle Manufacturing/Engine:

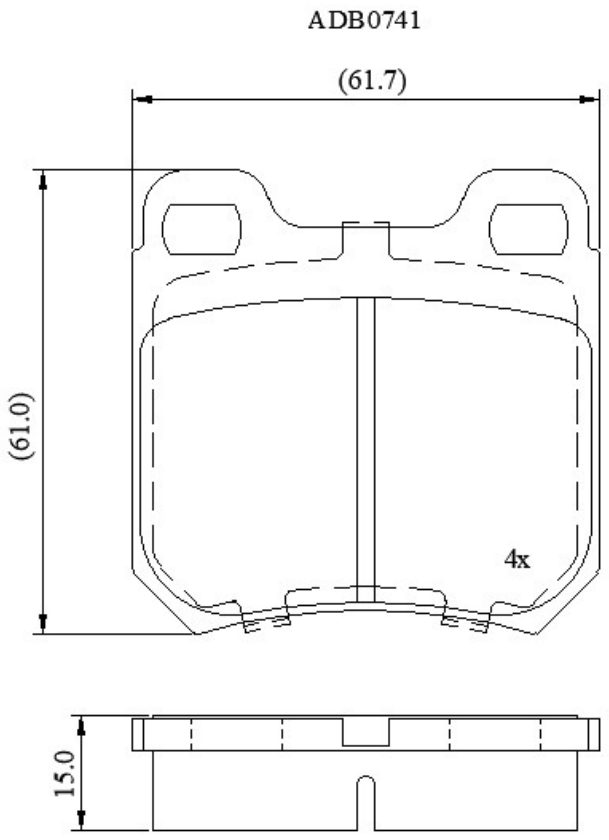

Specifications

Fitting Position	:	Rear

Model Date	:	10/95-12/01
Or. Caliper	:	Ate
WVA	:	21050
FMSI	:	
Length	:	61.7
Width	:	61
Thickness	:	15