Make: OPEL

Model: Vivaro Box

Part Number: ADB01780

Vehicle Manufacturing/Engine:

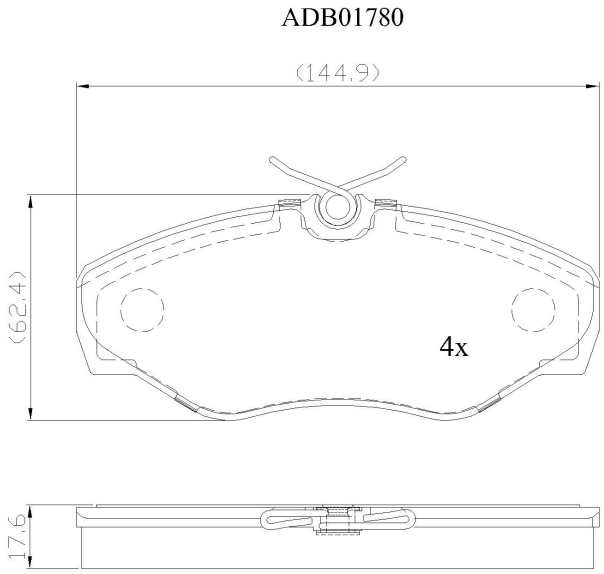

Specifications

Fitting Position	:	Front
Model Date	:	08/01->

Or. Caliper	:	Lucas
WVA	:	23099
FMSI	:	
Length	:	145
Width	:	62.6
Thickness	:	17.6