Make: OPEL

Model: ZAFIRA TOURER C

Part Number: ADB32930

Vehicle Manufacturing/Engine:

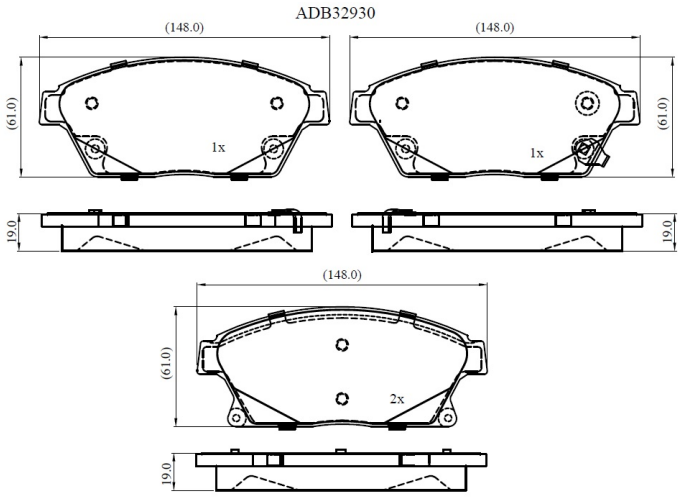

Specifications

Fitting Position	:	Front
Model Date	:	2013-
Or. Caliper	:	
WVA	:	25034

FMSI	:
Length	:
Width	:
Thickness	: