Make: PEUGEOT

Model: 106

Part Number: ADB0570

Vehicle Manufacturing/Engine:

ADB0570

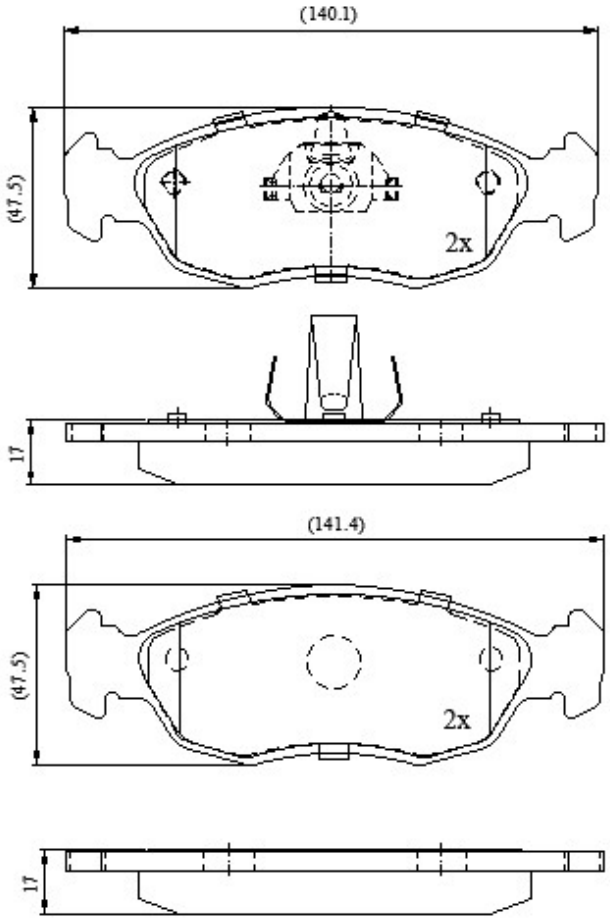

Specifications

Fitting Position	:	Front
Model Date	:	10/91->
Or. Caliper	:	Ate
WVA	:	21827
FMSI	:	
Length	:	140.1/141.4
Width	:	47.4
Thickness	:	17