Make: PEUGEOT

Model: 106

Part Number: ADB1570

Vehicle Manufacturing/Engine:

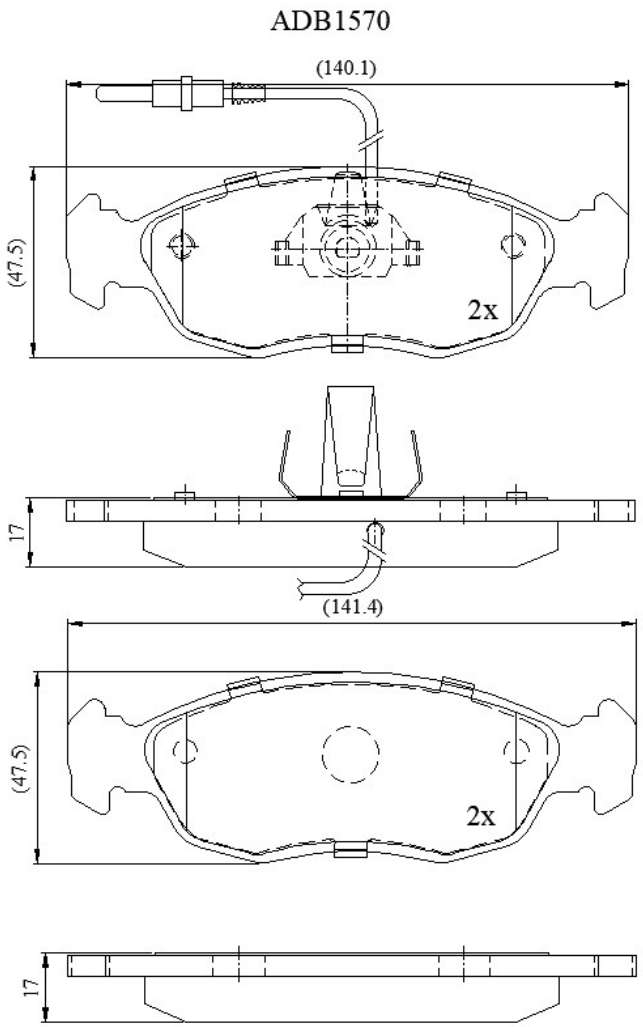

Specifications

Fitting Position	:	Front
Model Date	:	10/91->
Or. Caliper	:	Ate
WVA	:	21430
FMSI	:	
Length	:	141.4/140.1
Width	:	47
Thickness	:	17