Make: PEUGEOT

Model: 2008 II

Part Number: ADB02775

Vehicle Manufacturing/Engine:

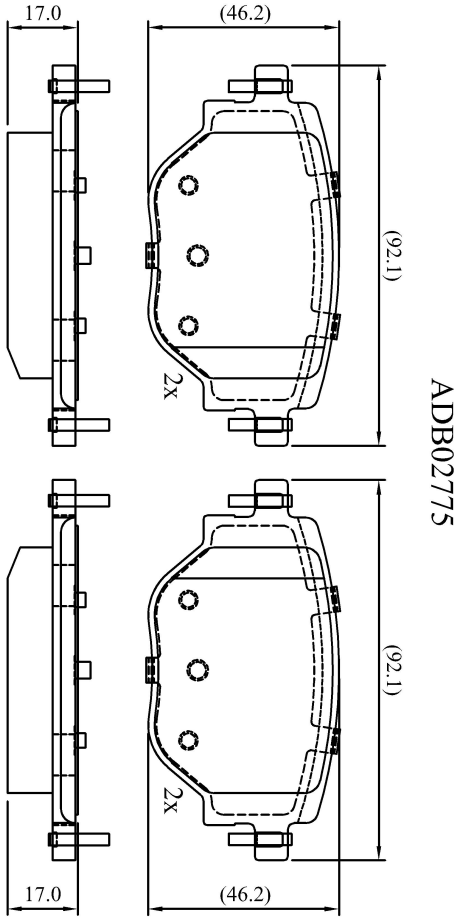

Specifications

Fitting Position	:	Rear
Model Date	:	2019-
Or. Caliper	:	
WVA	:	26195
FMSI	:	
Length	:	92
Width	:	46
Thickness	:	17