Make: PEUGEOT

Model: 206 CC

Part Number: ADB0522

Vehicle Manufacturing/Engine:

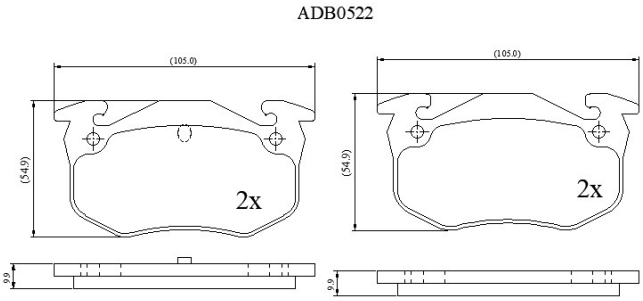

Specifications

Fitting Position	:	Rear
Model Date	:	07/00->
Or. Caliper	:	Bendix
WVA	:	2,06,35,20,973
FMSI	:	
Length	:	105

Width	:	54.86
Thickness	:	10.5