## Make: PEUGEOT

## Model: 306

## Part Number: ADB2416

## Vehicle Manufacturing/Engine:

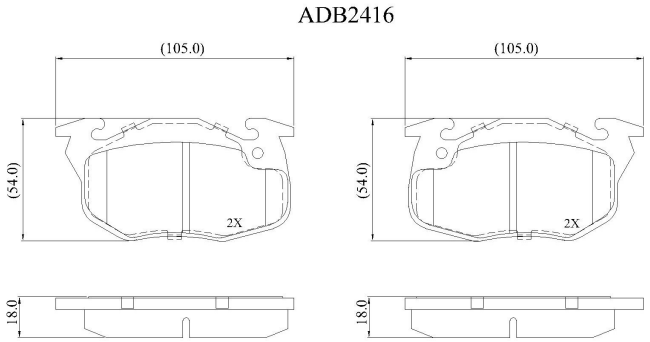


### Specifications

| | | |
|---|---|---|
| **Fitting Position** | : | Front |
| **Model Date** | : | 1994-2001 |
| **Or. Caliper** | : | |
| **WVA** | : | 2,10,61,20,906 |
| **FMSI** | : | |

| | | |
|---|---|---|
| **Length** | : | 105 |
| **Width** | : | 54 |
| **Thickness** | : | 18 |