Make: PEUGEOT

Model: 308 II

Part Number: ADB02335

Vehicle Manufacturing/Engine:

ADB02335

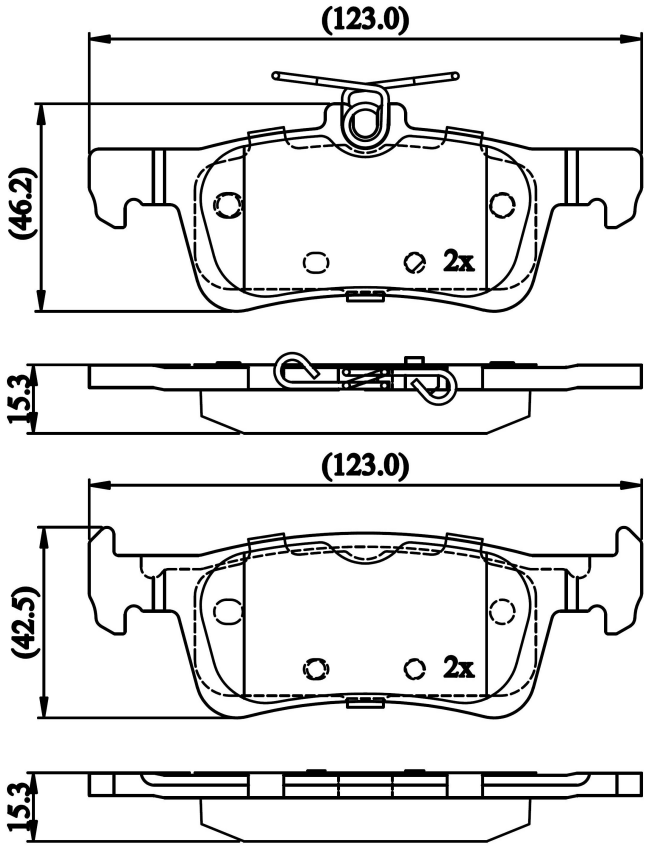

Specifications

Fitting Position	:	Rear

Model Date	:	11/2013 >
Or. Caliper	:	
WVA	:	25841, 25842
FMSI	:	
Length	:	123
Width	:	46.2
Thickness	:	16