Make: PEUGEOT

Model: 406

Part Number: ADB11060

Vehicle Manufacturing/Engine:

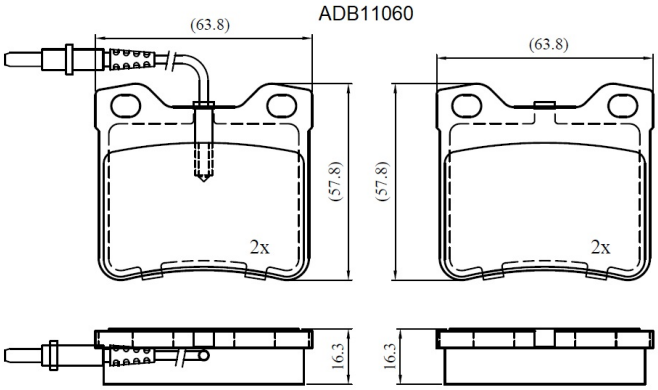

Specifications

Fitting Position	:	Rear
Model Date	:	01/96->
Or. Caliper	:	Ate
WVA	:	21278
FMSI	:	

Length	:	63.8
Width	:	57.5
Thickness	:	16.3