## Make: PEUGEOT

## Model: 508 I

## Part Number: ADB23203

## Vehicle Manufacturing/Engine:

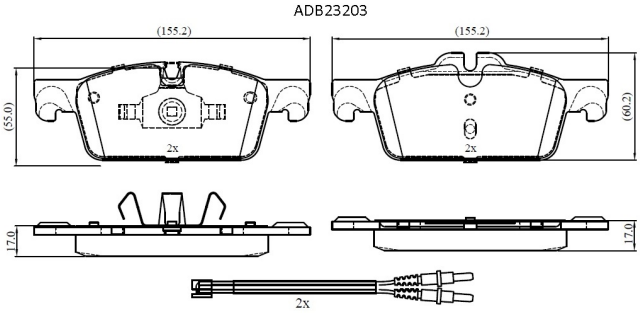


### Specifications

| | | |
|---|---|---|
| **Fitting Position** | : | Front |
| **Model Date** | : | 2014-2018 |
| **Or. Caliper** | : | |
| **WVA** | : | 25222 |
| **FMSI** | : | |
| **Length** | : | 155.2 |

| | | |
|---|---|---|
| **Width** | : | 55.0/60.0 |
| **Thickness** | : | 17 |