Make: PEUGEOT

Model: 508 SW I

Part Number: ADB23203

Vehicle Manufacturing/Engine:

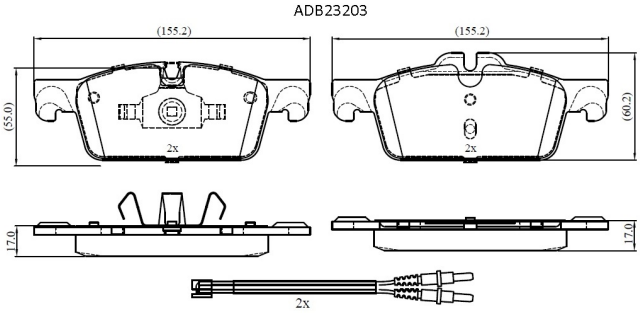

Specifications

Fitting Position	:	Front
Model Date	:	2010-2018
Or. Caliper	:	
WVA	:	25222
FMSI	:	
Length	:	155.2

Width	:	55.0/60.0
Thickness	:	17