Make: PEUGEOT

Model: 508 SW

Part Number: ADB22195

Vehicle Manufacturing/Engine:

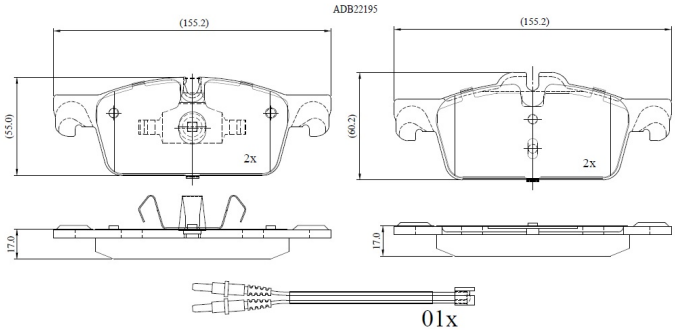

Specifications

Fitting Position	:	Front
Model Date	:	11/10-
Or. Caliper	:	Teves
WVA	:	25222, 25223
FMSI	:	
Length	:	155.2

Width	:	55.0/60.2
Thickness	:	17