Make: PEUGEOT

Model: 806

Part Number: ADB11001

Vehicle Manufacturing/Engine:

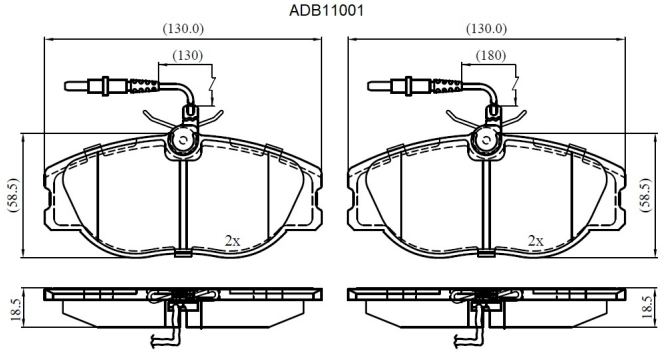

Specifications

Fitting Position	:	Front
Model Date	:	06/94-01/98
Or. Caliper	:	Lucas
WVA	:	21801
FMSI	:	
Length	:	130

Width	:	58.5
Thickness	:	18.5