Make: PEUGEOT

Model: 806

Part Number: ADB2714

Vehicle Manufacturing/Engine:

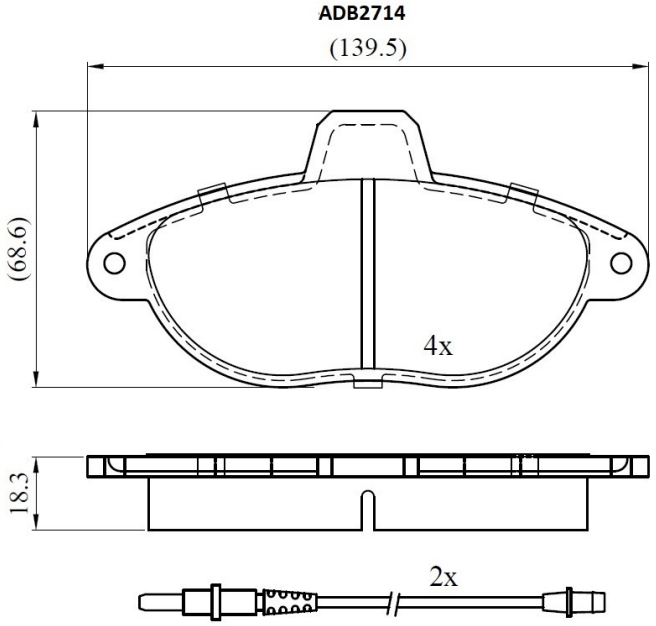

Specifications

Fitting Position	:	Front

Model Date	:	06/94-07/02
Or. Caliper	:	Bendix
WVA	:	23003
FMSI	:	
Length	:	139.5
Width	:	68.6
Thickness	:	18.3