## Make: PEUGEOT

## Model: 806

## Part Number: ADB13273

## Vehicle Manufacturing/Engine:

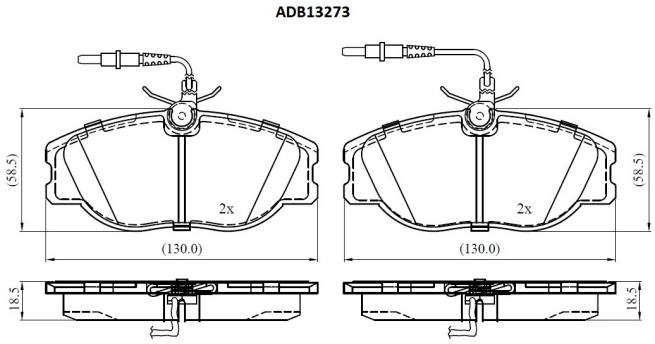


### Specifications

| | | |
|---|---|---|
| **Fitting Position** | : | Front |
| **Model Date** | : | 1994-2002 |
| **Or. Caliper** | : | |
| **WVA** | : | 21801 |
| **FMSI** | : | |
| **Length** | : | 130 |

| | | |
|---|---|---|
| **Width** | : | 58.5 |
| **Thickness** | : | 18.5 |