## Make: PEUGEOT

## Model: Partner Combi

## Part Number: ADB01033

## Vehicle Manufacturing/Engine:

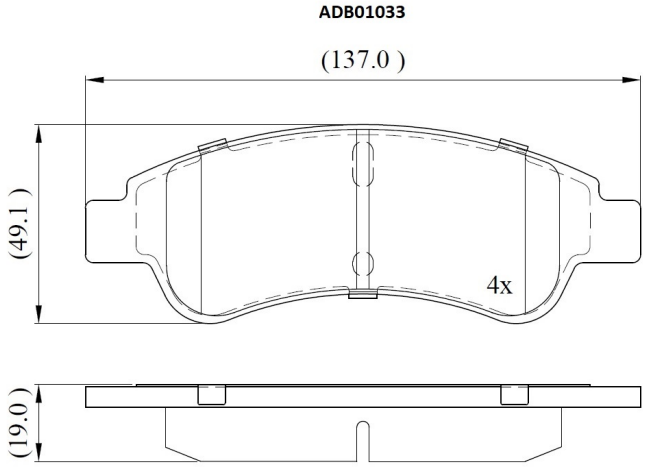


### Specifications

| | | |
|---|---|---|
| **Fitting Position** | : | Front |
| **Model Date** | : | 01/02-> |
| **Or. Caliper** | : | Bosch |
| **WVA** | : | 23599 |

| | | |
|---|---|---|
| **FMSI** | : | |
| **Length** | : | 137 |
| **Width** | : | 49 |
| **Thickness** | : | 19 |