Make: PORSCHE

Model: PANAMERA Sport Turismo

Part Number: ADB03239

Vehicle Manufacturing/Engine:

ADB03239

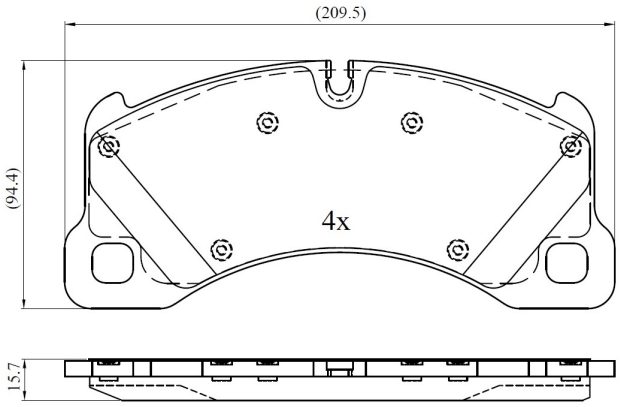

Specifications

Fitting Position	:	Front
Model Date	:	2017-
Or. Caliper	:	

WVA	:	25007
FMSI	:	
Length	:	209.5
Width	:	94.4
Thickness	:	15.7