Make: RENAULT

Model: GRAND SCNIC IV

Part Number: ADB06124

Vehicle Manufacturing/Engine:

ADB06124

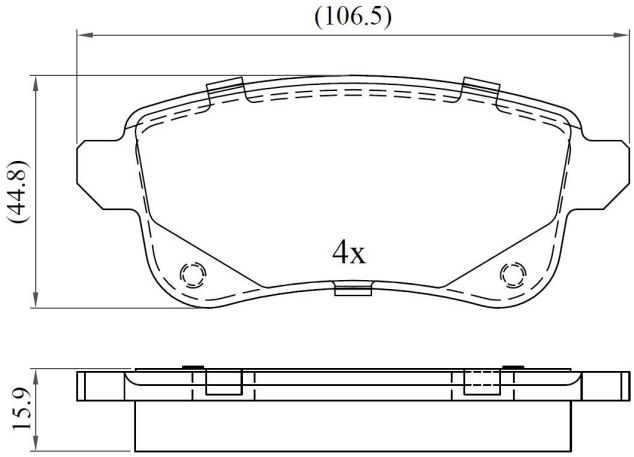

Specifications

Fitting Position	:	Rear
Model Date	:	2016-

Or. Caliper	:	
WVA	:	22103
FMSI	:	
Length	:	106.5
Width	:	44.8
Thickness	:	15.9