Make: RENAULT

Model: Kangoo Express

Part Number: ADB02946

Vehicle Manufacturing/Engine:

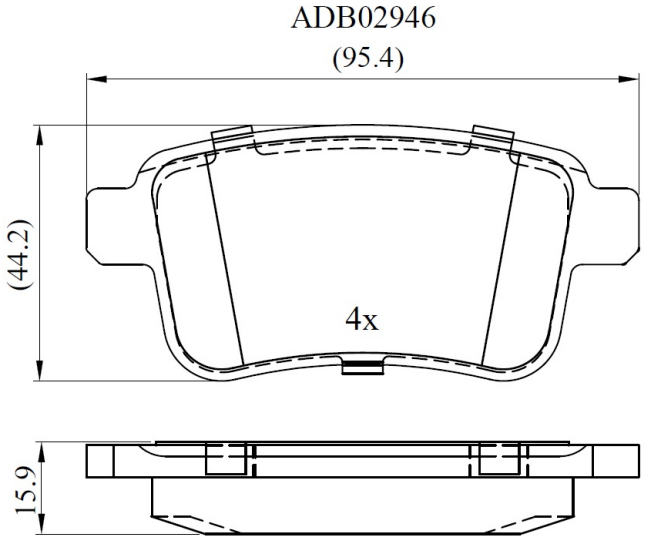

Specifications

Fitting Position	:	Rear
Model Date	:	2008-
Or. Caliper	:	

WVA	:	24692
FMSI	:	
Length	:	
Width	:	
Thickness	:	