Make: RENAULT

Model: KOLEOS I

Part Number: ADB33006

Vehicle Manufacturing/Engine:

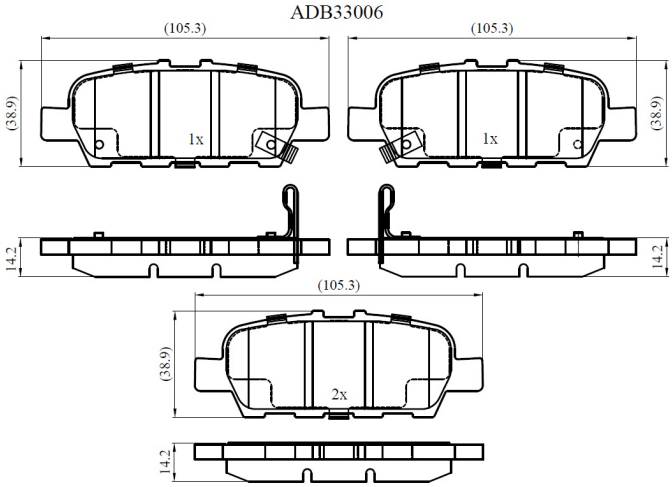

Specifications

Fitting Position	:	Rear
Model Date	:	2008-
Or. Caliper	:	
WVA	:	23871

FMSI	:
Length	:
Width	:
Thickness	: