Make: RENAULT

Model: Laguna II (12/00->)

Part Number: ADB01116

Vehicle Manufacturing/Engine:

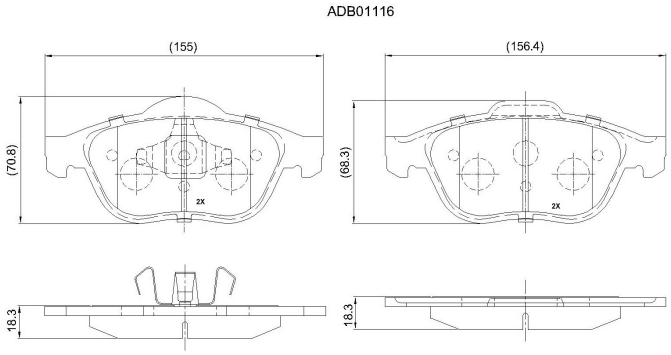

Specifications

Fitting Position	:	Front
Model Date	:	12/00->
Or. Caliper	:	Ate
WVA	:	23278
FMSI	:	
Length	:	156.4/155.0

Width	:	72.8/68.3
Thickness	:	18.3