## Make: RENAULT

## Model: Laguna II (12/00->)

## Part Number: ADB01116

## Vehicle Manufacturing/Engine:

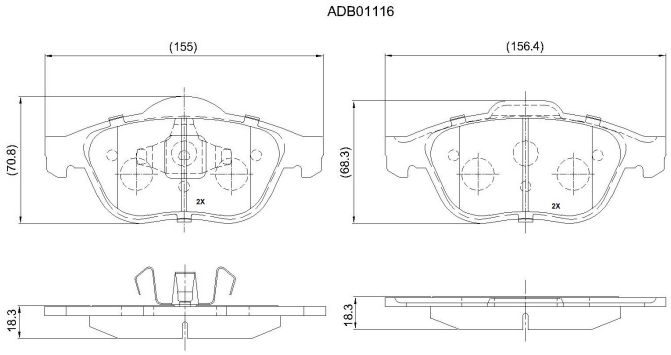


### Specifications

| | | |
|---|---|---|
| **Fitting Position** | : | Front |
| **Model Date** | : | 12/00-> |
| **Or. Caliper** | : | Ate |
| **WVA** | : | 23278 |
| **FMSI** | : | |
| **Length** | : | 156.4/155.0 |

| | | |
|---|---|---|
| **Width** | : | 72.8/68.3 |
| **Thickness** | : | 18.3 |