Make: RENAULT

Model: MEGANE CC

Part Number: ADB02162

Vehicle Manufacturing/Engine:

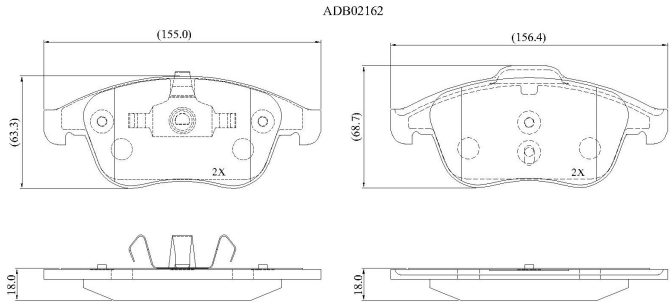

Specifications

Fitting Position	:	Front
Model Date	:	06/10-
Or. Caliper	:	ATE
WVA	:	24710, 24826
FMSI	:	
Length	:	155.1

Width	:	63.0/68.3
Thickness	:	18