## Make: RENAULT

## Model: Megane III Hatchback

## Part Number: ADB02162

## Vehicle Manufacturing/Engine:

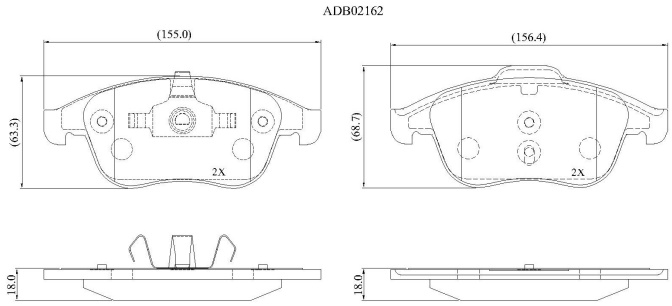


### Specifications

| | | |
|---|---|---|
| **Fitting Position** | : | Front |
| **Model Date** | : | 11/08- |
| **Or. Caliper** | : | ATE |
| **WVA** | : | 24710, 24826 |
| **FMSI** | : | |
| **Length** | : | 155.1 |

| | | |
|---|---|---|
| **Width** | : | 63.0/68.3 |
| **Thickness** | : | 18 |