Make: RENAULT

Model: MEGANE IV Grandtour

Part Number: ADB02423

Vehicle Manufacturing/Engine:

ADB02423

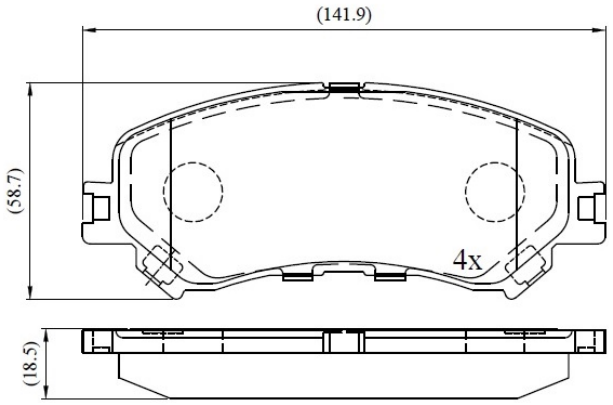

Specifications

Fitting Position	:	Front
Model Date	:	2016-
Or. Caliper	:	
WVA	:	22347

FMSI	:	
Length	:	142.2
Width	:	58.6
Thickness	:	18.5