Make: RENAULT

Model: Scenic(04/01->)

Part Number: ADB0526

Vehicle Manufacturing/Engine:

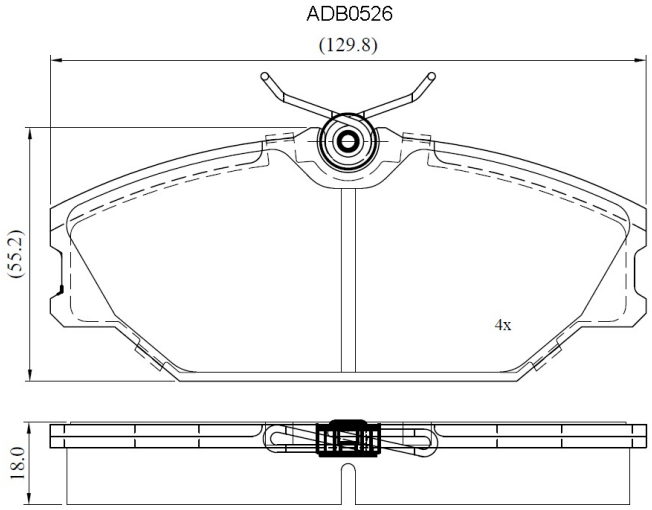

Specifications

Fitting Position	:	Front
Model Date	:	04/01->
Or. Caliper	:	Lucas

WVA	:	23172
FMSI	:	
Length	:	129.8
Width	:	55.2
Thickness	:	18