Make: RENAULT

Model: Traffic->10/00

Part Number: ADB0183

Vehicle Manufacturing/Engine:

ADB0183

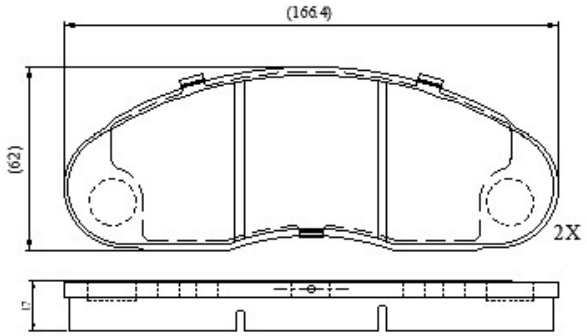

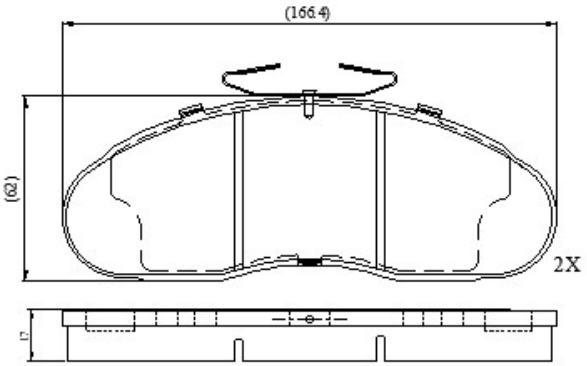

Specifications

Fitting Position	:	Front

Model Date	:	09/89-10/00
Or. Caliper	:	Bendix
WVA	:	29071
FMSI	:	
Length	:	166.4
Width	:	62
Thickness	:	17