## Make: ROVER

## Model: 200 II Hatchback

## Part Number: ADB33286

## Vehicle Manufacturing/Engine:

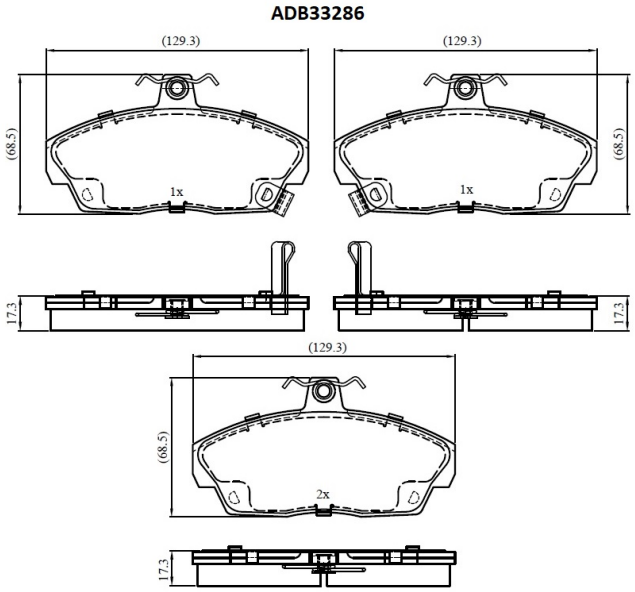


### Specifications

| | | |
|---|---|---|
| **Fitting Position** | : | Front |
| **Model Date** | : | 1995-2000 |

| | | |
|---|---|---|
| **Or. Caliper** | : | |
| **WVA** | : | 21515 |
| **FMSI** | : | |
| **Length** | : | 129.3 |
| **Width** | : | 68.5 |
| **Thickness** | : | 17.3 |