Make: ROVER

Model: 800

Part Number: ADB33286

Vehicle Manufacturing/Engine:

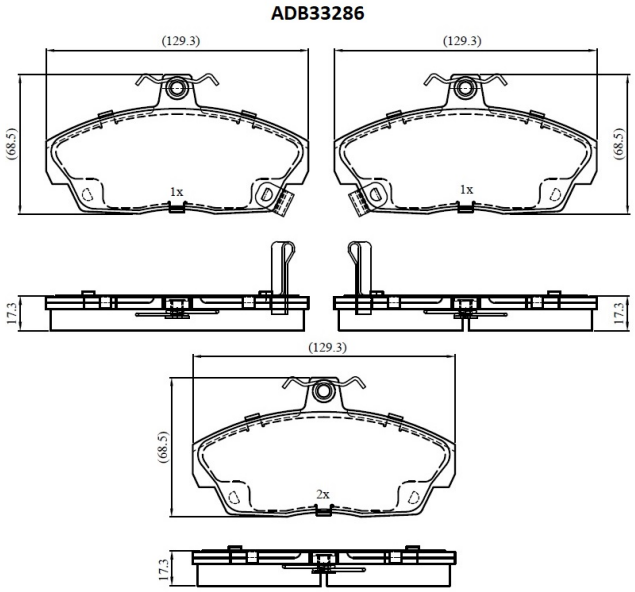

Specifications

Fitting Position	:	Front
Model Date	:	1992-1999

Or. Caliper	:	
WVA	:	21515
FMSI	:	
Length	:	129.3
Width	:	68.5
Thickness	:	17.3