Make: SEAT

Model: Alhambra

Part Number: ADB1885

Vehicle Manufacturing/Engine:

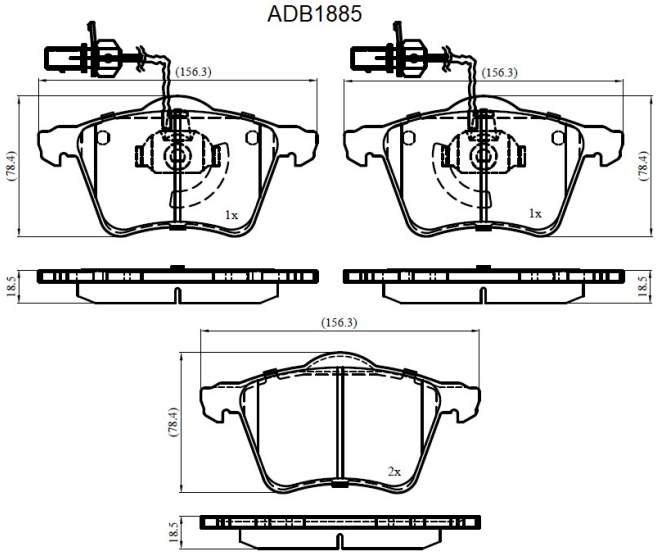

Specifications

Fitting Position	:	Front
Model Date	:	05/00->

Or. Caliper	:	Ate
WVA	:	23034
FMSI	:	
Length	:	156.3
Width	:	78.4
Thickness	:	18.5