Make: SEAT

Model: Alhambra

Part Number: ADB13184

Vehicle Manufacturing/Engine:

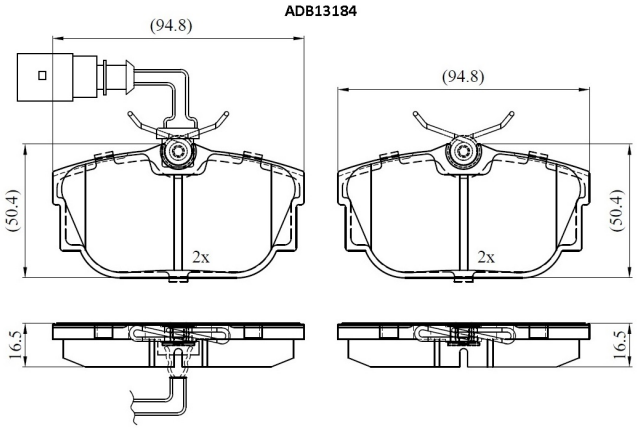

Specifications

Fitting Position	:	Rear
Model Date	:	2000-2010
Or. Caliper	:	
WVA	:	23446

FMSI	:	
Length	:	94.8
Width	:	50.4
Thickness	:	16.5