Make: SEAT

Model: Arosa

Part Number: ADB01144

Vehicle Manufacturing/Engine:

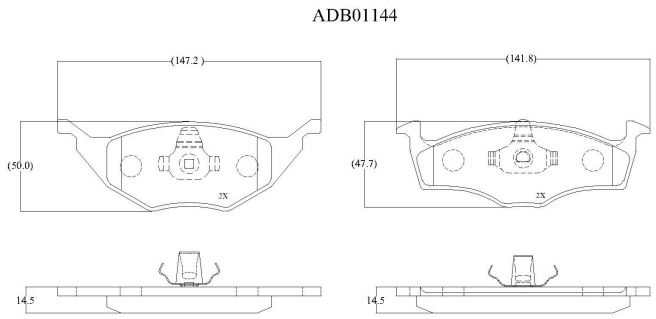

Specifications

Fitting Position	:	Front
Model Date	:	07/2000->06/2004
Or. Caliper	:	
WVA	:	23395
FMSI	:	
Length	:	147.20/141.60

Width	:	51.00/47.90
Thickness	:	15.8