Make: SEAT

Model: Cordoba

Part Number: ADB13183

Vehicle Manufacturing/Engine:

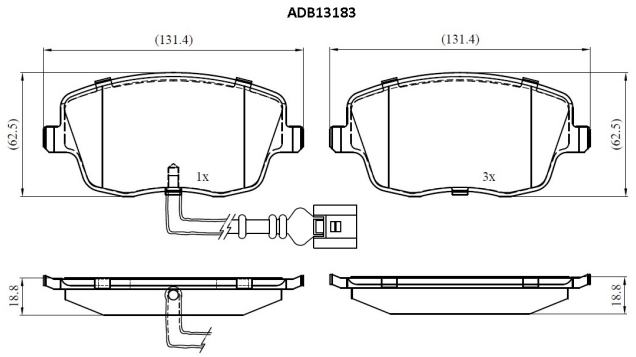

Specifications

Fitting Position	:	Front
Model Date	:	2002-2009
Or. Caliper	:	
WVA	:	23581
FMSI	:	

Length	:	131.4
Width	:	62.5
Thickness	:	18.8