Make: SEAT

Model: Ibiza (08/00->02/02)

Part Number: ADB0797

Vehicle Manufacturing/Engine:

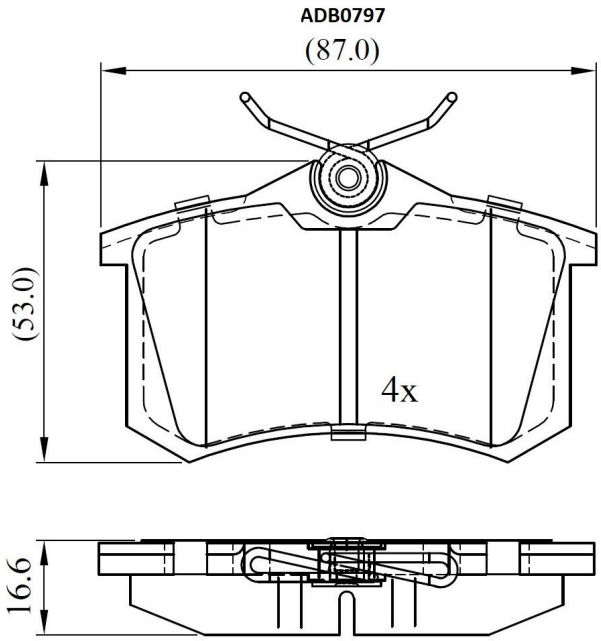

Specifications

Fitting Position	:	Rear

Model Date	:	08/00-02/02
Or. Caliper	:	Lucas
WVA	:	20961
FMSI	:	
Length	:	87
Width	:	53
Thickness	:	17