## Make: SEAT

## Model: IBIZA Mk IV ST

## Part Number: ADB03202

## Vehicle Manufacturing/Engine:

ADB03202

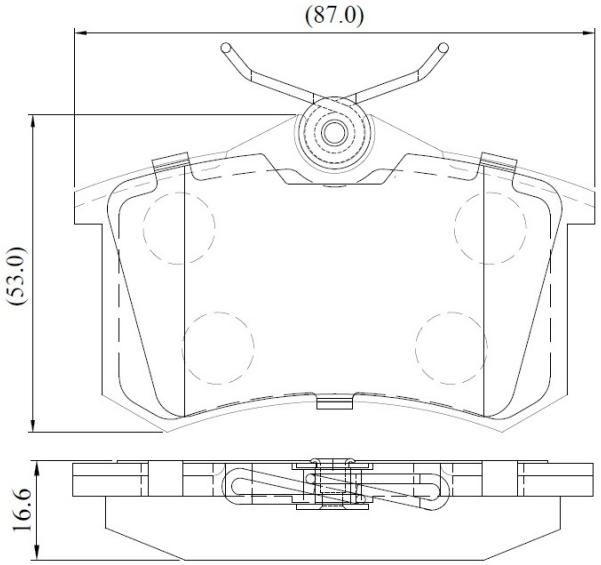


### Specifications

| | | |
|---|---|---|
| **Fitting Position** | : | Rear |

| | | |
|---|---|---|
| **Model Date** | : | 2015-2016 |
| **Or. Caliper** | : | |
| **WVA** | : | 23554 |
| **FMSI** | : | |
| **Length** | : | 87 |
| **Width** | : | 53 |
| **Thickness** | : | 16.6 |