## Make: SEAT

## Model: LEON ST

## Part Number: ADB12201

## Vehicle Manufacturing/Engine:

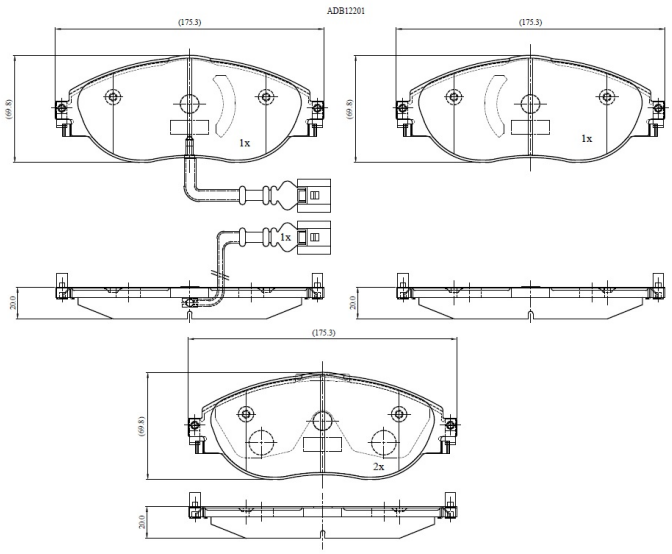


### Specifications

| | | |
|---|---|---|
| **Fitting Position** | : | Front |
| **Model Date** | : | 10/13- |
| **Or. Caliper** | : | TRW |

| | | |
|---|---|---|
| **WVA** | : | 24738, 25217 |
| **FMSI** | : | |
| **Length** | : | 175.3 |
| **Width** | : | 70 |
| **Thickness** | : | 20 |