Make: SEAT

Model: LEON ST

Part Number: ADB12201

Vehicle Manufacturing/Engine:

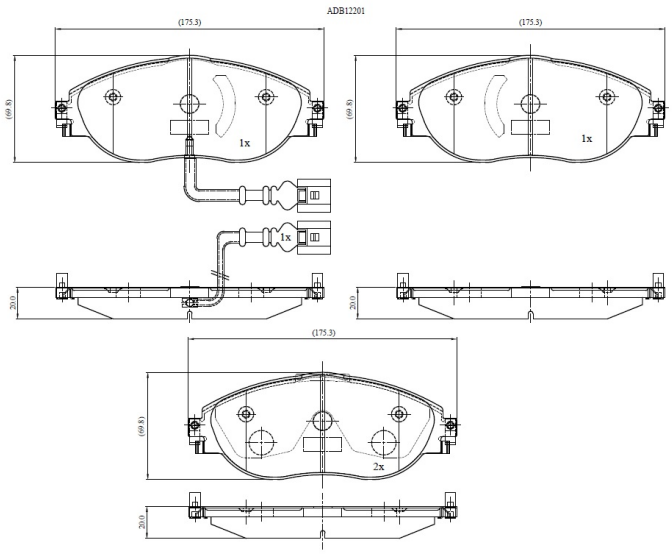

Specifications

Fitting Position	:	Front
Model Date	:	10/13-
Or. Caliper	:	TRW

WVA	:	24738, 25217
FMSI	:	
Length	:	175.3
Width	:	70
Thickness	:	20