Make: SEAT

Model: Toledo

Part Number: ADB0152

Vehicle Manufacturing/Engine:

ADB0152

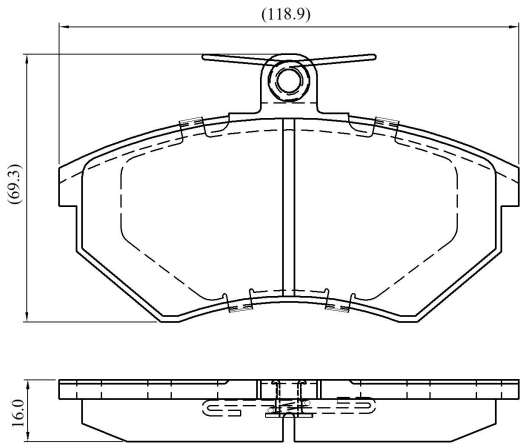

Specifications

Fitting Position	:	Front
Model Date	:	04/91-03/99
Or. Caliper	:	Lucas

WVA	:	20168
FMSI	:	
Length	:	118.9
Width	:	69.3
Thickness	:	16