Make: SEAT

Model: Toledo

Part Number: ADB01092

Vehicle Manufacturing/Engine:

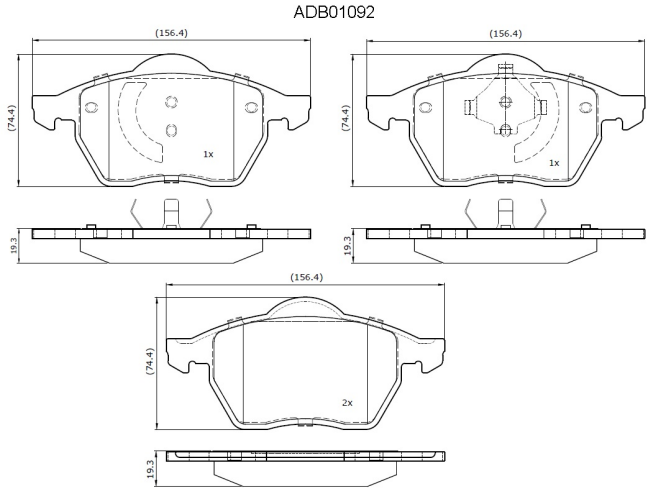

Specifications

Fitting Position	:	Front
Model Date	:	03/99->
Or. Caliper	:	Ate

WVA	:	21911
FMSI	:	
Length	:	156.4
Width	:	74.4/74.5
Thickness	:	19.3