## Make: SEAT

## Model: Toledo

## Part Number: ADB1797

## Vehicle Manufacturing/Engine:

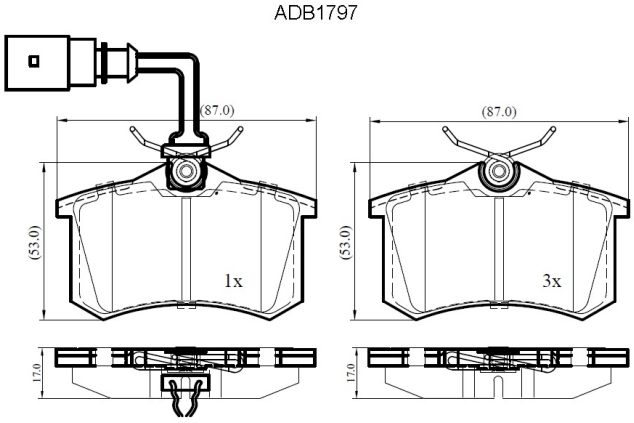


### Specifications

| | | |
|---|---|---|
| **Fitting Position** | : | Rear |
| **Model Date** | : | 03/99-> |
| **Or. Caliper** | : | Lucas |
| **WVA** | : | 2,09,61,23,554 |

| | | |
|---|---|---|
| **FMSI** | : | |
| **Length** | : | 87 |
| **Width** | : | 53 |
| **Thickness** | : | 17 |