Make: SEAT

Model: Toledo

Part Number: ADB1851

Vehicle Manufacturing/Engine:

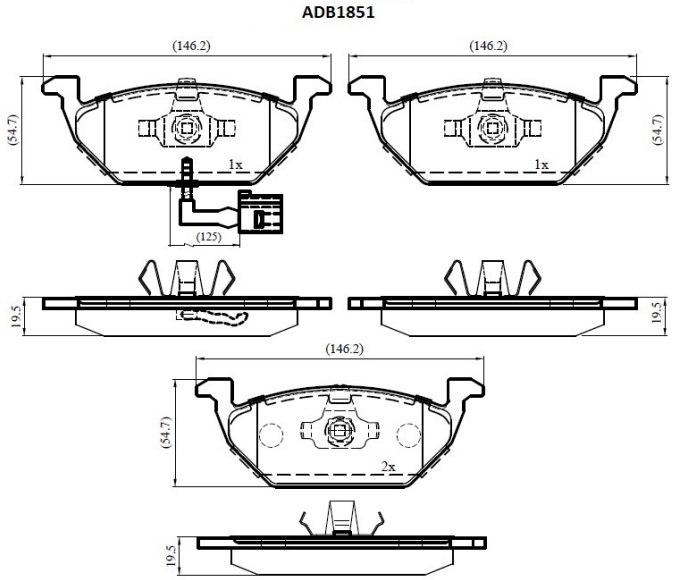

Specifications

Fitting Position	:	Front
Model Date	:	03/99->

Or. Caliper	:	Ate
WVA	:	23131
FMSI	:	
Length	:	146
Width	:	54.7
Thickness	:	20