Make: SSANGYONG

Model: Korando

Part Number: ADB33209

Vehicle Manufacturing/Engine:

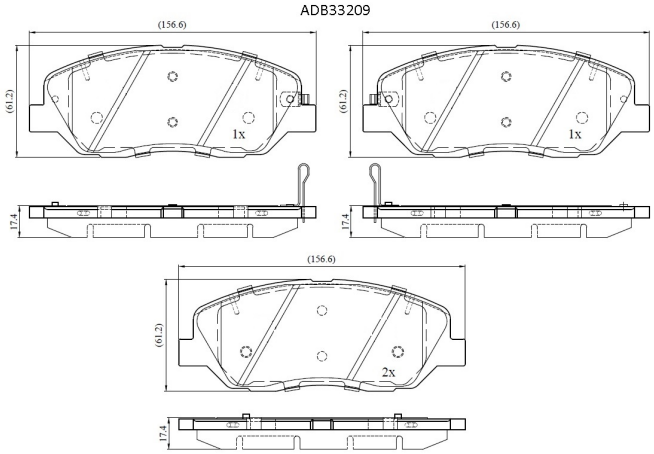

Specifications

Fitting Position	:	Front
Model Date	:	2012-
Or. Caliper	:	
WVA	:	24351

FMSI	:	
Length	:	156.6
Width	:	61.2
Thickness	:	17.4