## Make: SSANGYONG

## Model: Korando

## Part Number: ADB33209

## Vehicle Manufacturing/Engine:

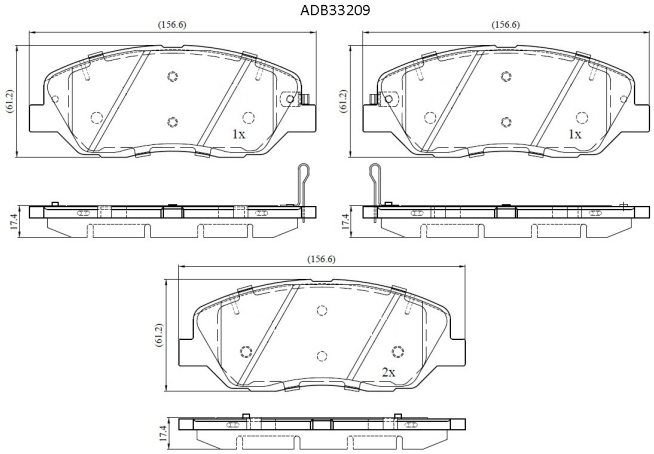


### Specifications

| | | |
|---|---|---|
| **Fitting Position** | : | Front |
| **Model Date** | : | 2015- |
| **Or. Caliper** | : | |
| **WVA** | : | 24351 |

| | | |
|---|---|---|
| **FMSI** | : | |
| **Length** | : | 156.6 |
| **Width** | : | 61.2 |
| **Thickness** | : | 17.4 |