Make: SUBARU

Model: Impreza (->10/00)

Part Number: ADB3127

Vehicle Manufacturing/Engine:

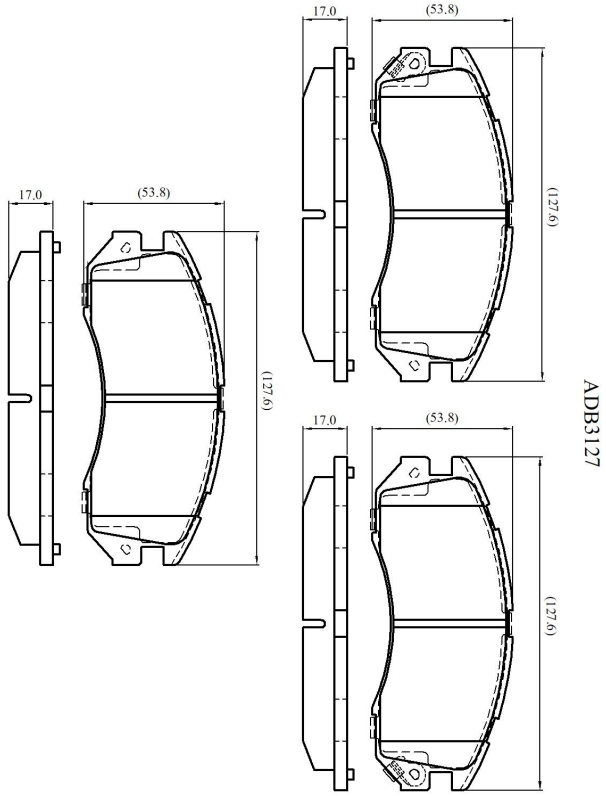

Specifications

Fitting Position	:	Front
Model Date	:	04/93-09/96

Or. Caliper	:	Akebono
WVA	:	21496
FMSI	:	
Length	:	127.6
Width	:	53.8
Thickness	:	17