Make: SUBARU

Model: Impreza (->10/00)

Part Number: ADB3218

Vehicle Manufacturing/Engine:

ADB3218

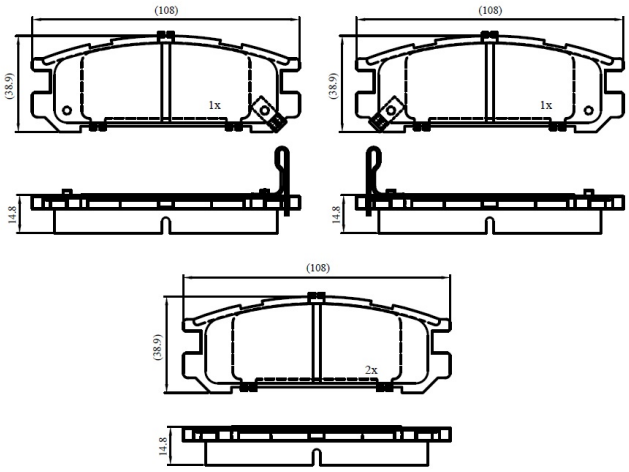

Specifications

Fitting Position	:	Rear
Model Date	:	04/93-10/00
Or. Caliper	:	Akebono

WVA	:	21705
FMSI	:	
Length	:	108
Width	:	38.9
Thickness	:	14.8