Make: SUBARU

Model: Impreza (->10/00)

Part Number: ADB3722

Vehicle Manufacturing/Engine:

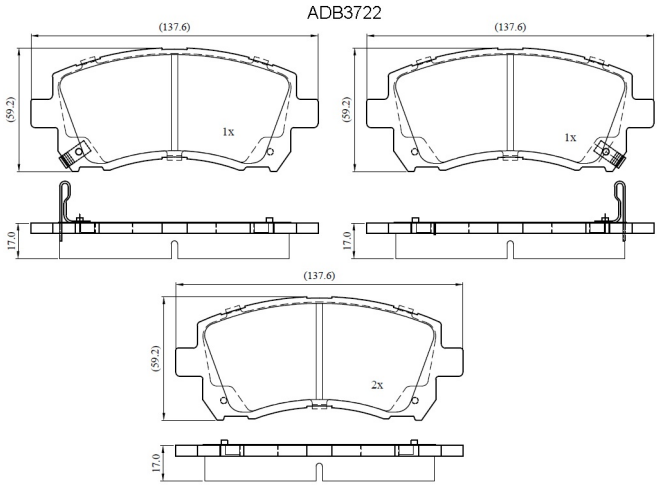

Specifications

Fitting Position	:	Front
Model Date	:	08/96-08/98
Or. Caliper	:	Akebono

WVA	:	23558
FMSI	:	
Length	:	137.6
Width	:	59.2
Thickness	:	17